Cambridge International AS & A Level

Cambridge International Examinations
Cambridge International Advanced Subsidiary and Advanced Level

CANDIDATE NAME

CENTRE NUMBER | | | | | |

CANDIDATE NUMBER | | | | |

7771506777

PHYSICS **9702/41**

Paper 4 A Level Structured Questions **October/November 2017**

2 hours

Candidates answer on the Question Paper.

No Additional Materials are required.

READ THESE INSTRUCTIONS FIRST

Write your Centre number, candidate number and name on all the work you hand in.
Write in dark blue or black pen.
You may use an HB pencil for any diagrams or graphs.
Do not use staples, paper clips, glue or correction fluid.
DO **NOT** WRITE IN ANY BARCODES.

Answer **all** questions.

Electronic calculators may be used.
You may lose marks if you do not show your working or if you do not use appropriate units.

At the end of the examination, fasten all your work securely together.
The number of marks is given in brackets [ ] at the end of each question or part question.

This document consists of **23** printed pages and **1** blank page.

DC (JP) 154384
© UCLES 2017

CAMBRIDGE International Examinations

Data

speed of light in free space	$c = 3.00 \times 10^{8}\,\text{m s}^{-1}$
permeability of free space	$\mu_0 = 4\pi \times 10^{-7}\,\text{H m}^{-1}$
permittivity of free space	$\varepsilon_0 = 8.85 \times 10^{-12}\,\text{F m}^{-1}$
	$(\frac{1}{4\pi\varepsilon_0} = 8.99 \times 10^{9}\,\text{m F}^{-1})$
elementary charge	$e = 1.60 \times 10^{-19}\,\text{C}$
the Planck constant	$h = 6.63 \times 10^{-34}\,\text{J s}$
unified atomic mass unit	$1\,\text{u} = 1.66 \times 10^{-27}\,\text{kg}$
rest mass of electron	$m_e = 9.11 \times 10^{-31}\,\text{kg}$
rest mass of proton	$m_p = 1.67 \times 10^{-27}\,\text{kg}$
molar gas constant	$R = 8.31\,\text{J K}^{-1}\,\text{mol}^{-1}$
the Avogadro constant	$N_A = 6.02 \times 10^{23}\,\text{mol}^{-1}$
the Boltzmann constant	$k = 1.38 \times 10^{-23}\,\text{J K}^{-1}$
gravitational constant	$G = 6.67 \times 10^{-11}\,\text{N m}^2\,\text{kg}^{-2}$
acceleration of free fall	$g = 9.81\,\text{m s}^{-2}$

© UCLES 2017

Formulae

uniformly accelerated motion	$s = ut + \frac{1}{2}at^2$ $v^2 = u^2 + 2as$
work done on/by a gas	$W = p\Delta V$
gravitational potential	$\phi = -\frac{Gm}{r}$
hydrostatic pressure	$p = \rho gh$
pressure of an ideal gas	$p = \frac{1}{3}\frac{Nm}{V}\langle c^2 \rangle$
simple harmonic motion	$a = -\omega^2 x$
velocity of particle in s.h.m.	$v = v_0 \cos \omega t$ $v = \pm \omega \sqrt{(x_0^2 - x^2)}$
Doppler effect	$f_o = \frac{f_s v}{v \pm v_s}$
electric potential	$V = \frac{Q}{4\pi\varepsilon_0 r}$
capacitors in series	$1/C = 1/C_1 + 1/C_2 + \ldots$
capacitors in parallel	$C = C_1 + C_2 + \ldots$
energy of charged capacitor	$W = \frac{1}{2}QV$
electric current	$I = Anvq$
resistors in series	$R = R_1 + R_2 + \ldots$
resistors in parallel	$1/R = 1/R_1 + 1/R_2 + \ldots$
Hall voltage	$V_H = \frac{BI}{ntq}$
alternating current/voltage	$x = x_0 \sin \omega t$
radioactive decay	$x = x_0 \exp(-\lambda t)$
decay constant	$\lambda = \frac{0.693}{t_{\frac{1}{2}}}$

© UCLES 2017

[Turn over

Answer **all** the questions in the spaces provided.

1 **(a)** State

(i) what may be deduced from the difference in the temperatures of two objects,

.....

..... [1]

(ii) the basic principle by which temperature is measured.

.....

..... [1]

(b) By reference to your answer in **(a)(ii)**, explain why two thermometers may not give the same temperature reading for an object.

.....

.....

..... [2]

(c) A block of aluminium of mass 670 g is heated at a constant rate of 95 W for 6.0 minutes.
The specific heat capacity of aluminium is 910 $J\,kg^{-1}\,K^{-1}$.
The initial temperature of the block is 24 °C.

(i) Assuming that no thermal energy is lost to the surroundings, show that the final temperature of the block is 80 °C.

[3]

© UCLES 2017

(ii) In practice, there are energy losses to the surroundings.
The actual variation with time t of the temperature θ of the block is shown in Fig. 1.1.

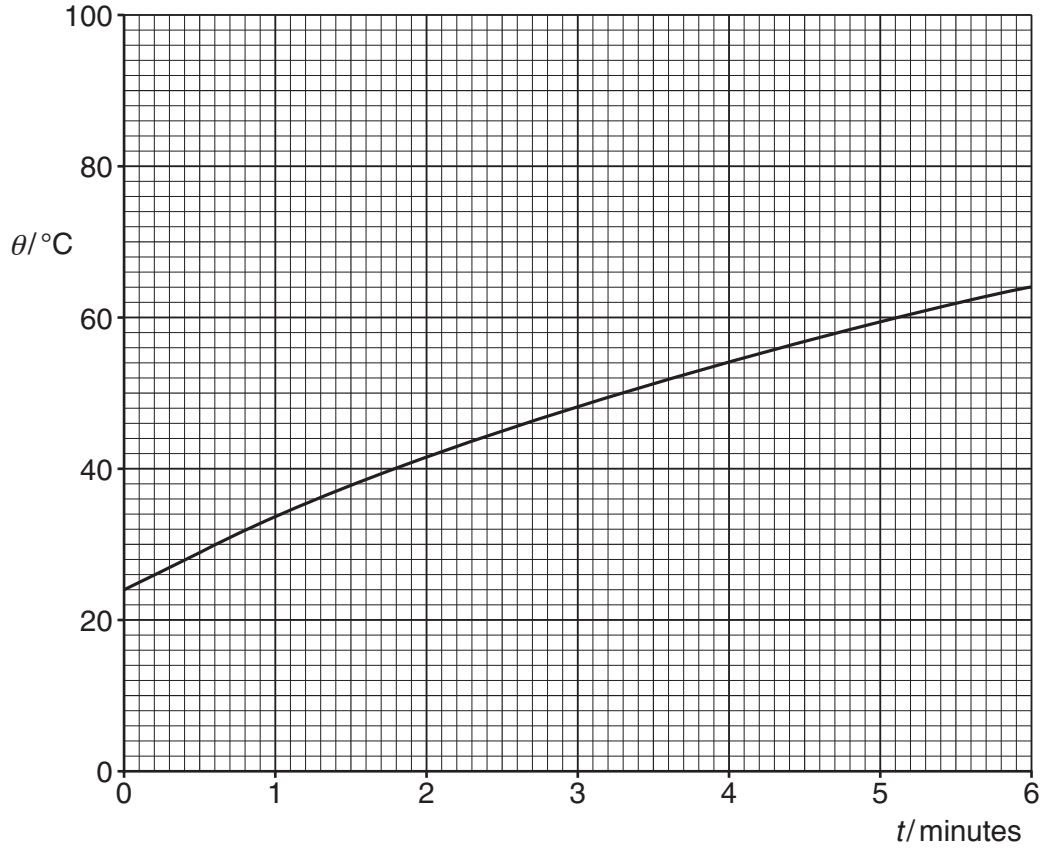

Fig. 1.1

1. Use the information in **(i)** to draw, on Fig. 1.1, a line to represent the temperature of the block, assuming no energy losses to the surroundings. [1]

2. Using Fig. 1.1, calculate the total energy loss to the surroundings during the heating process.

energy loss = ... J [2]

[Total: 10]

2 **(a)** State, by reference to simple harmonic motion, what is meant by *angular frequency*.

.....

..... [1]

(b) A thin metal strip is clamped at one end so that it is horizontal.
A load of mass *M* is attached to its free end. The load causes a displacement *s* of the end of the strip, as shown in Fig. 2.1.

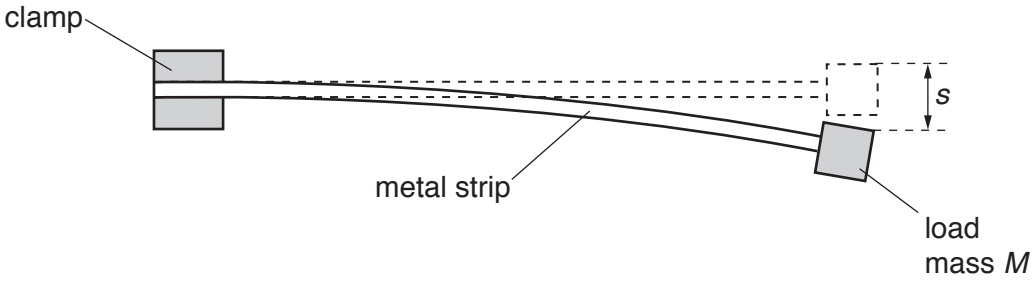

Fig. 2.1

The load is displaced vertically and then released. The load oscillates.
The variation with the acceleration *a* of the displacement *s* of the load is shown in Fig. 2.2.

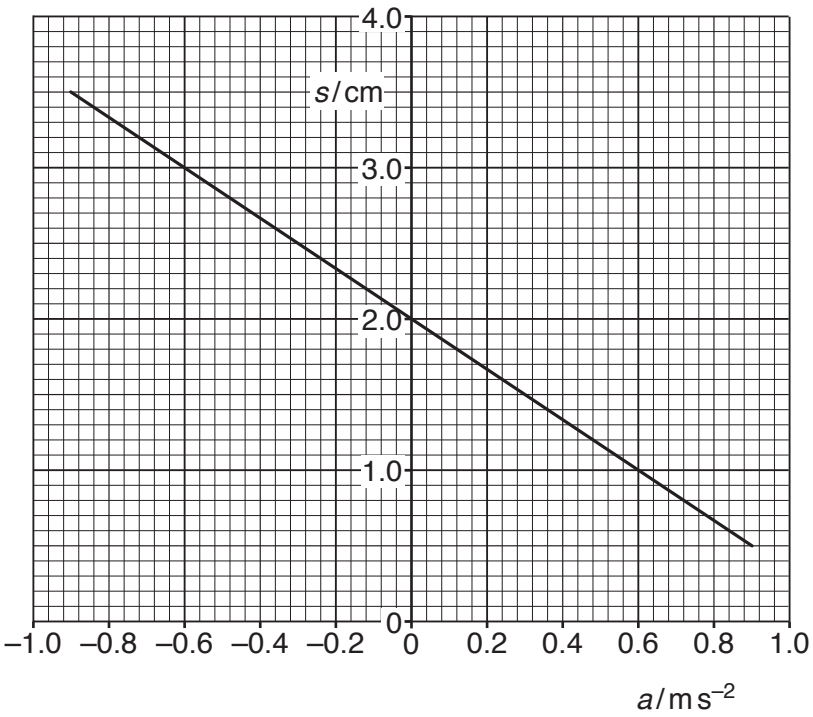

Fig. 2.2

© UCLES 2017

(i) Use Fig. 2.2 to determine

1. the displacement of the load before it is made to oscillate,

displacement = ... cm

2. the amplitude of the oscillations of the load.

amplitude = ... cm
[2]

(ii) Show that the load is undergoing simple harmonic motion.

.....

.....

.....

..... [3]

(iii) Calculate the frequency of oscillation of the load.

frequency = ... Hz [3]

[Total: 9]

3 **(a)** Define *gravitational field strength*.

.....

..... [1]

(b) Explain why, for changes in vertical position of a point mass near the Earth's surface, the gravitational field strength may be considered to be constant.

.....

.....

.....

..... [2]

(c) The orbit of the Earth about the Sun is approximately circular with a radius of 1.5×10^8 km. The time period of the orbit is 365 days.

Determine a value for the mass M of the Sun. Explain your working.

M = ... kg [5]

[Total: 8]

© UCLES 2017

4 A coaxial cable is frequently used to connect an aerial to a television receiver. Such a cable is illustrated in Fig. 4.1.

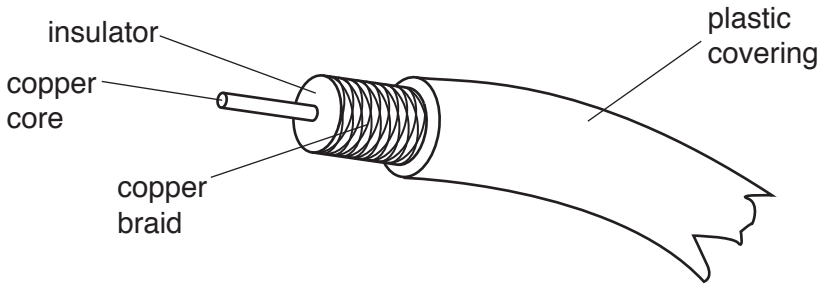

Fig. 4.1

(a) Suggest two functions of the copper braid.

1. .....

.....

2. .....

.....

[2]

(b) Suggest two reasons why a wire pair is not usually used to connect the aerial to the receiver.

1. .....

.....

2. .....

.....

[2]

(c) The coaxial cable connecting an aerial to a receiver has length 14 m.
The cable has an attenuation per unit length of 190 dB km^{-1}.

Calculate the fractional **loss** in signal power during transmission of the signal along the cable.

fractional loss = ... [4]

[Total: 8]

© UCLES 2017

[Turn over

5 **(a)** **(i)** State Coulomb's law for the force between two point charges.

.....

..... [1]

(ii) Two point charges are situated in a vacuum and separated by a distance R. The force between the charges is F_C.

On Fig. 5.1, sketch a graph to show the variation of the force F between the charges with separation x for values of x from $x = R$ to $x = 4R$.

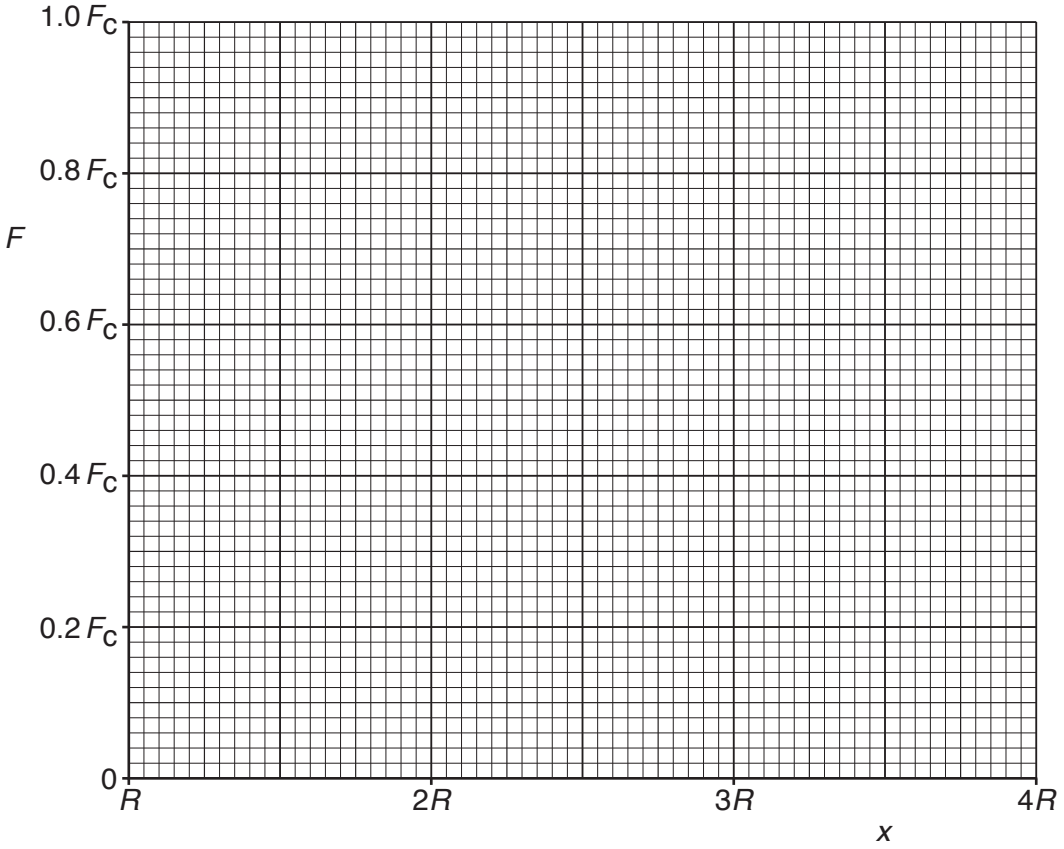

[3]

Fig. 5.1

(b) Two coils C and D are placed close to one another, as shown in Fig. 5.2.

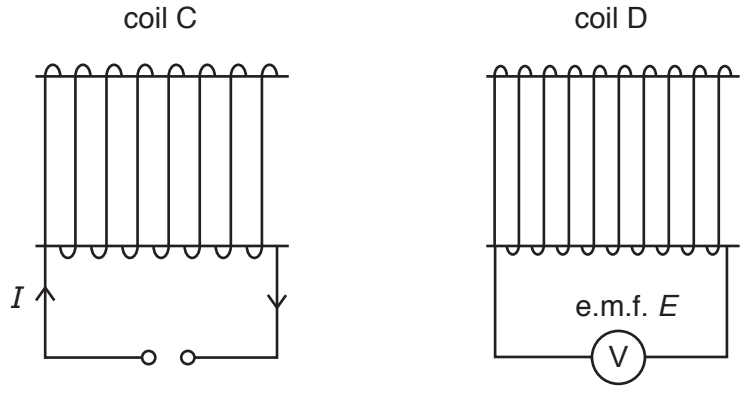

Fig. 5.2

© UCLES 2017

The variation with time t of the current I in coil C is shown in Fig. 5.3.

On Fig. 5.4, show the variation with time t of the e.m.f. E induced in coil D for time $t = 0$ to time $t = t_5$.

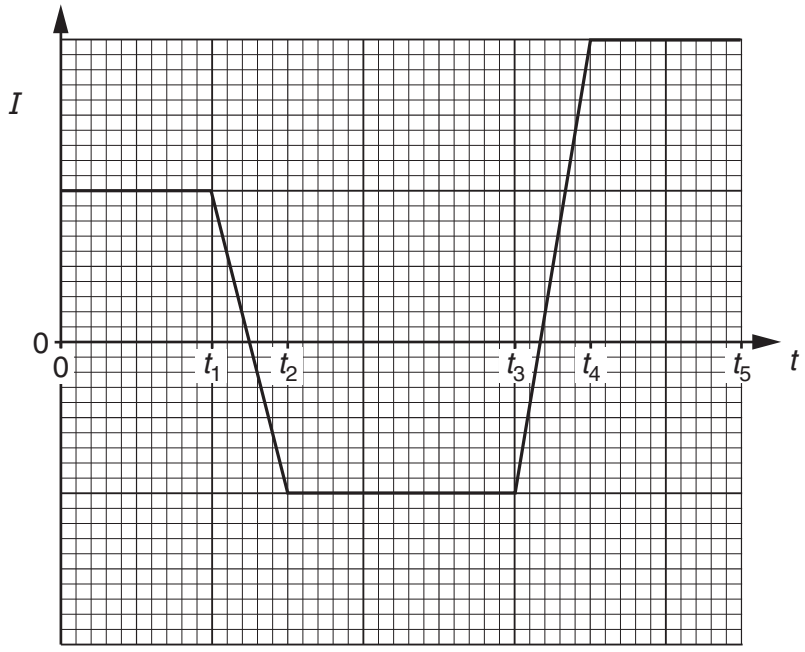

Fig. 5.3

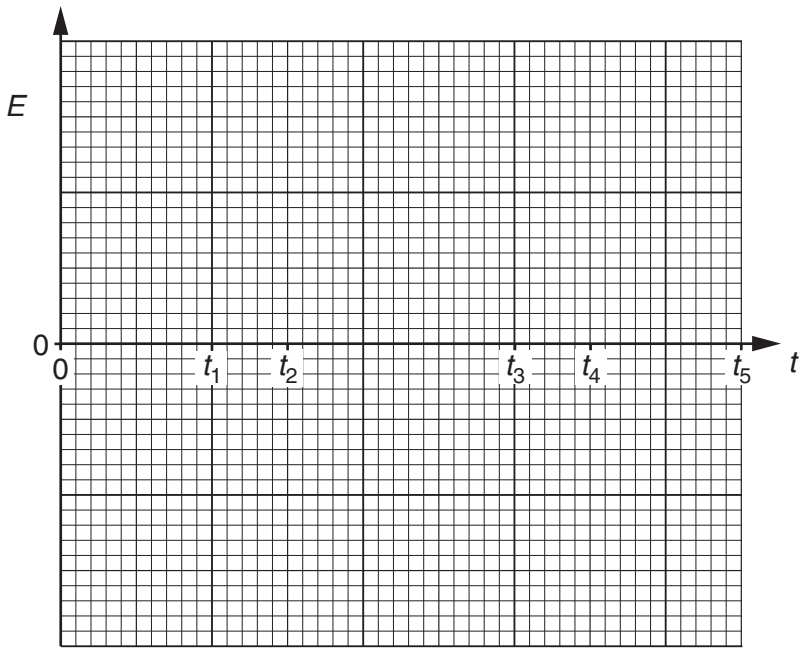

Fig. 5.4

[4]

[Total: 8]

6 Two capacitors P and Q, each of capacitance *C*, are connected in series with a battery of e.m.f. 9.0 V, as shown in Fig. 6.1.

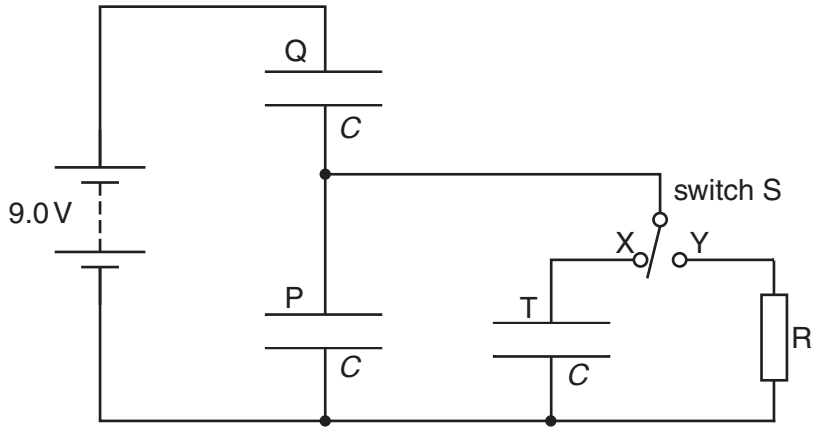

Fig. 6.1

A switch S is used to connect either a third capacitor T, also of capacitance *C*, or a resistor R, in parallel with capacitor P.

(a) Switch S is in position X.

Calculate

(i) the combined capacitance, in terms of *C*, of the three capacitors,

capacitance = ... [2]

(ii) the potential difference across capacitor Q. Explain your working.

potential difference = ... V [2]

© UCLES 2017

(b) Switch S is now moved to position Y.
State what happens to the potential difference across capacitor P and across capacitor Q.

capacitor P: .....

.....

.....

capacitor Q: .....

.....

.....

[4]

[Total: 8]

7 The circuit of an amplifier incorporating an ideal operational amplifier (op-amp) is shown in Fig. 7.1.

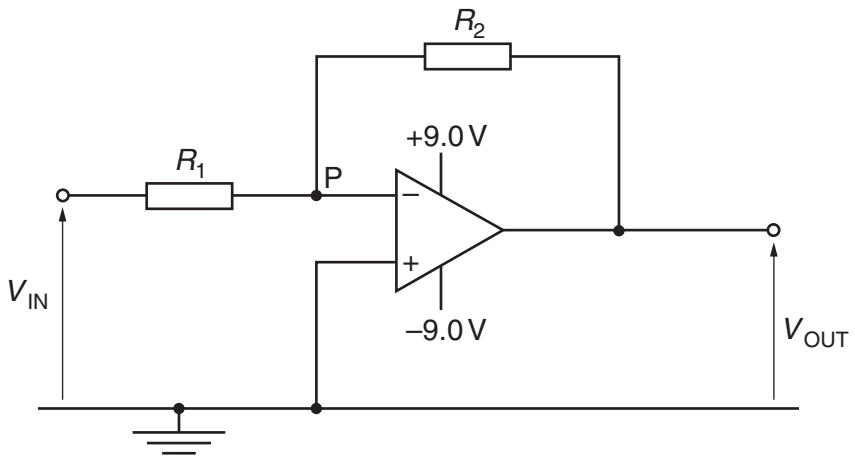

Fig. 7.1

(a) By reference to the properties of an ideal op-amp,

(i) explain why point P is referred to as a *virtual earth*,

.....

.....

.....

.....

..... [4]

(ii) derive an expression, in terms of the resistances R_1 and R_2, for the gain of the amplifier circuit.

[4]

(b) In the circuit of Fig. 7.1, the ratio $\frac{R_2}{R_1}$ is 4.5.

The variation with time t of the input potential V_{IN} is shown in Fig. 7.2.

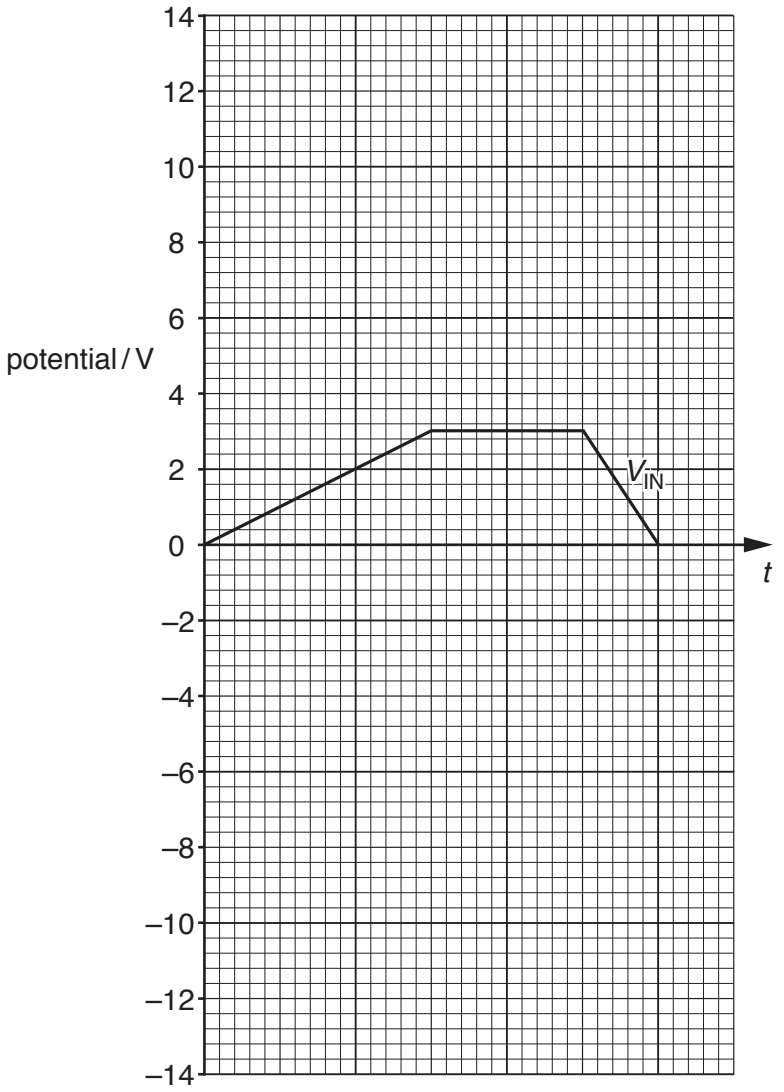

Fig. 7.2

On Fig. 7.2, show the variation with time t of the output potential V_{OUT}. [3]

[Total: 11]

8 A thin slice of conducting material is placed normal to a uniform magnetic field of flux density B, as shown in Fig. 8.1.

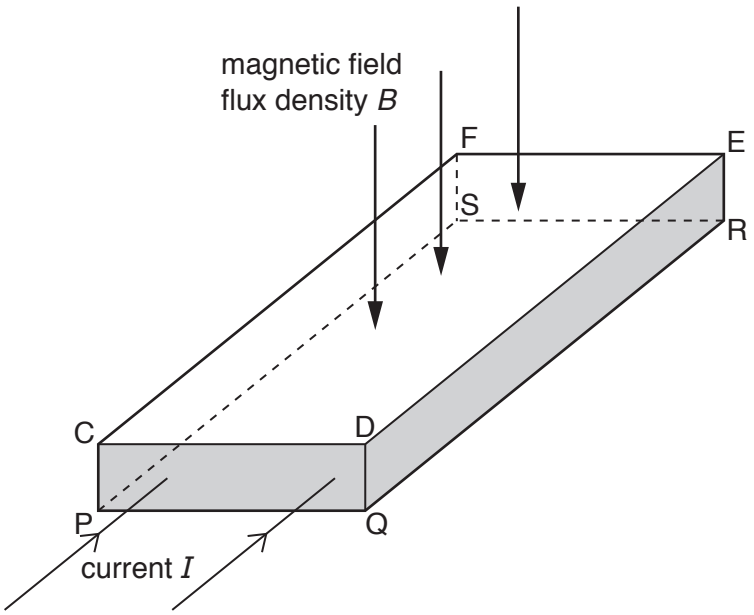

Fig. 8.1

The magnetic field is normal to face CDEF and to face PQRS.

A current I passes through the slice and is normal to the faces CDQP and FERS.

A potential difference, the Hall voltage V_H, is developed across the slice.

(a) State the faces between which the Hall voltage V_H is developed.

..... and ..... [1]

(b) The current I is produced by charge carriers, each of charge $+q$ moving at speed v in the direction of the current. The number density of the charge carriers is n.

(i) Derive an expression relating the Hall voltage V_H to v, B and d, where d is one of the dimensions of the slice.

[3]

© UCLES 2017

(ii) Use your answer in **(b)(i)** and an expression for the current I in the slice to derive the expression

$$V_H = \frac{BI}{ntq}.$$

Explain your working.

[2]

(c) Suggest why the Hall voltage is difficult to detect in a thin slice of copper.

.....

.....

..... [2]

[Total: 8]

9 **(a)** In computed tomography (CT scanning), it is necessary to take a series of many X-ray images.
Outline briefly the principles of CT scanning.

.....

.....

.....

.....

.....

.....

.....

.....

.....

..... [4]

(b) A student creates a model for CT scanning.
A section is divided into four voxels, with pixel numbers A, B, C and D, as shown in Fig. 9.1.

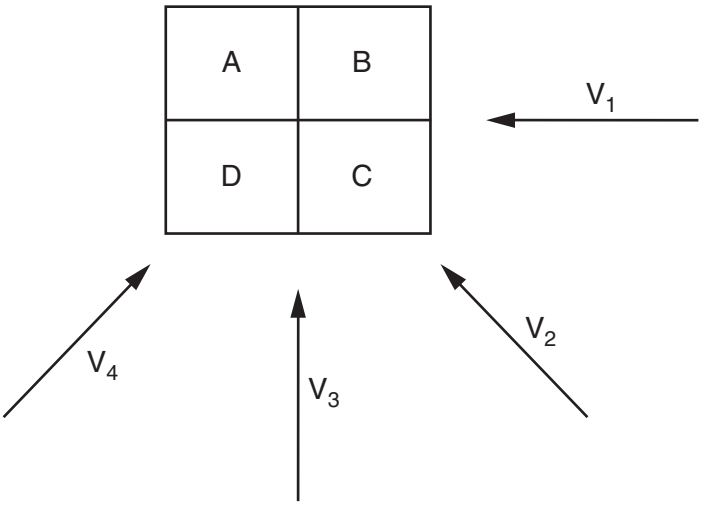

Fig. 9.1

The section is viewed from four different directions V_1, V_2, V_3 and V_4, as shown in Fig. 9.1.

The detector readings for each direction are noted and then summed. The result is shown in Fig. 9.2.

47	59
44	32

Fig. 9.2

The background count is 26.

Determine the pixel numbers A, B, C and D as shown in Fig. 9.1.

A ..... B .....

D ..... C .....

[3]

[Total: 7]

10 **(a)** The mean value of an alternating current is zero.
Explain why heating occurs when there is an alternating current in a resistor.

.....

.....

.....

..... [2]

(b) Transmission of electrical energy is frequently achieved using alternating high voltages.
Suggest why

(i) high voltages are used,

.....

.....

.....

..... [2]

(ii) the voltage is alternating.

.....

.....

.....

..... [2]

[Total: 6]

© UCLES 2017

11 **(a)** State what is meant by a *photon*.

.....

..... [1]

(b) Indium-123 ($^{123}_{49}$In) is radioactive.
A nucleus of indium-123 emits a γ-ray photon of energy 1.1 MeV.

Determine, for this γ-radiation,

(i) the frequency,

frequency = ... Hz [2]

(ii) the momentum of a photon.

momentum = ... N s [2]

(c) The indium-123 nucleus is stationary before emission of the γ-ray photon.
Use your answer in **(b)(ii)** to estimate the recoil speed of the nucleus after emission of the photon.

speed = ... $m\,s^{-1}$ [2]

[Total: 7]

© UCLES 2017

[Turn over

12 **(a)** A radiation detector is placed close to a radioactive source. The detector does not surround the source.
Radiation is emitted in all directions and, as a result, the activity of the source and the measured count rate are different.

Suggest two other reasons why the activity and the measured count rate may be different.

1. .....

.....

2. .....

.....
[2]

(b) The variation with time t of the measured count rate in **(a)** is shown in Fig. 12.1.

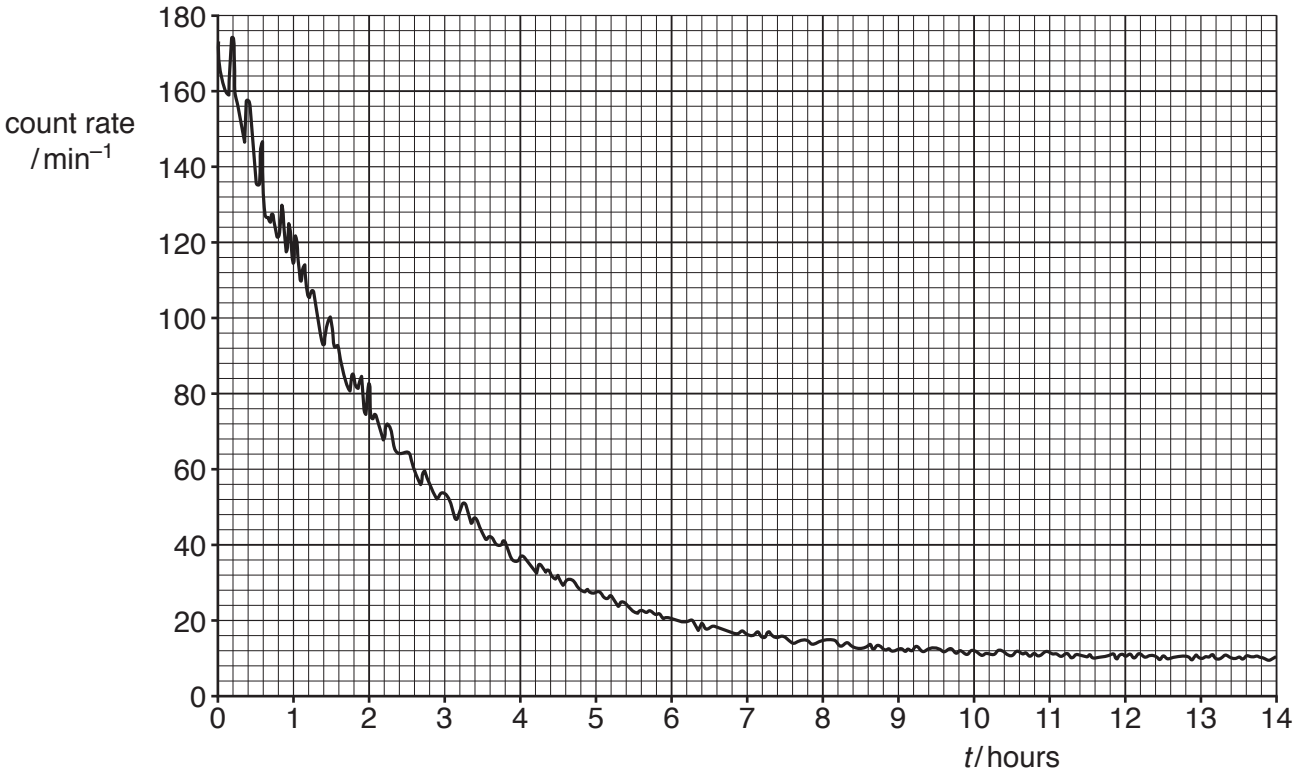

Fig. 12.1

(i) State the feature of Fig. 12.1 that indicates the random nature of radioactive decay.

.....

..... [1]

(ii) Use Fig. 12.1 to determine the half-life of the radioactive isotope in the source.

half-life = ... hours [4]

(c) The readings in **(b)** were obtained at room temperature.
A second sample of this isotope is heated to a temperature of 500 °C.
The initial count rate at time $t = 0$ is the same as that in **(b)**.
The variation with time t of the measured count rate from the heated source is determined.

State, with a reason, the difference, if any, in

1. the half-life,

.....

.....

.....

2. the measured count rate for any specific time.

.....

.....

.....

[3]

[Total: 10]

© UCLES 2017

BLANK PAGE

Permission to reproduce items where third-party owned material protected by copyright is included has been sought and cleared where possible. Every reasonable effort has been made by the publisher (UCLES) to trace copyright holders, but if any items requiring clearance have unwittingly been included, the publisher will be pleased to make amends at the earliest possible opportunity.

To avoid the issue of disclosure of answer-related information to candidates, all copyright acknowledgements are reproduced online in the Cambridge International Examinations Copyright Acknowledgements Booklet. This is produced for each series of examinations and is freely available to download at www.cie.org.uk after the live examination series.

Cambridge International Examinations is part of the Cambridge Assessment Group. Cambridge Assessment is the brand name of University of Cambridge Local Examinations Syndicate (UCLES), which is itself a department of the University of Cambridge.